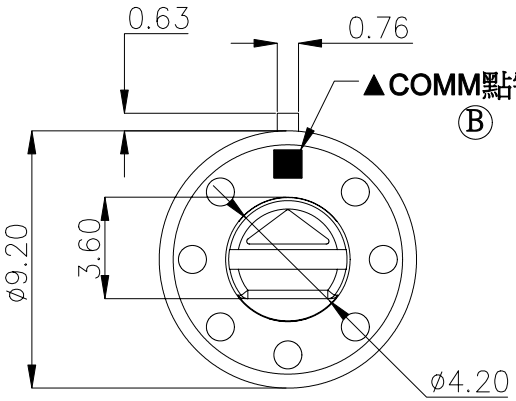

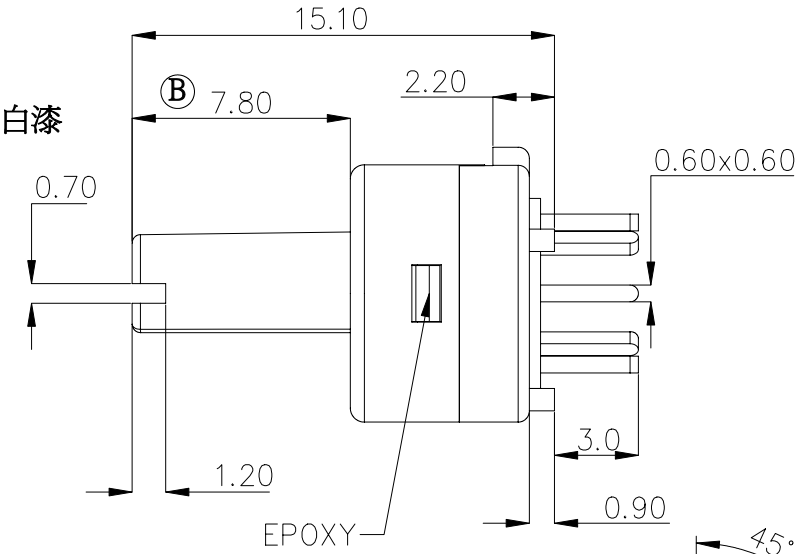

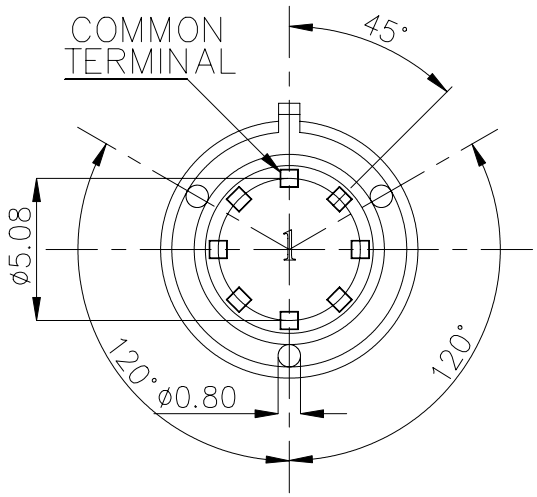

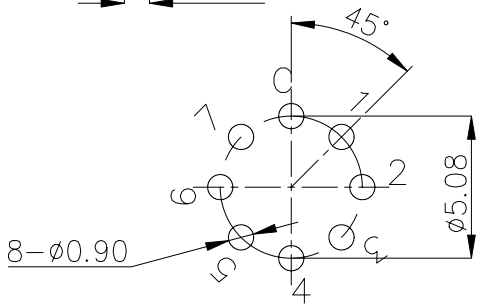

P.C.B. LAYOUT

TRAVEL	SWITCH POSITION
0°	C-C(OFF)
45°	C-1
90°	C-2
135°	C-3
180°	C-4
225°	C-5
270°	C-6
315°	C-7

SPECIFICATIONS

ELECTRICAL RATING: 0.5A 24VDC; 0.2A 48VDC
CONTACT RESISTANCE:100mΩ MAX.
INSULATION RESISTANCECE:100MΩ MIN. 500VDC
DIELECTRIC STRENGHT:Breakdown is not allowable; 500VAC for 1 minute
OPERATING FORCE: 350±100g
OPERATING LIFE: 2,000 cycles
PERATING TEMPERATURE RANGE : -20°C ~ 70°C

MATERIAL
HOUSING: NYLON 6/6
BASE:LCP
ACTUATOR: NYLON 6/6
TERMINAL: Brass gold plating.

	符號	原尺寸	修改後尺寸	變更日期
1	Ⓐ		圖面重新整理	OCT-19-2010
2	Ⓑ		增加註解與柄長7.80	OCT-25-2010
3	Ⓒ	料號變更參照ECN N1037		DEC-02-2010
4	Ⓓ			
5	Ⓔ			

SCALE (比例) : 4 : 1

TOLERANCE (公差) :
0.00 mm ± 0.25mm
0.0 mm ± 0.40mm
ANGULAR : ± 5°
FILE NAME : RT0001

TITLE 圖名	ROTARY SWITCH			SIZE 圖紙	A4
DWG NO. 圖號	Ⓒ RT-0C8			UNIT 單位	mm
REV. 版本	D	DATE 日期	JAN-07-2010	SHEET 張數	1 of 1
CHECKED BY 審核	RICHARD		DRAWN BY 製圖	Jack_Lun	